MATRIX	Service Bulletin Pedal Axle Set	
Effective Date: May 24, 2016	**Models Affected:**	**Bulletin Num.**
Prepared by: Eric Chen	H3X/5X-F (CB64/CB72/CB72B/CB72C/CB87) U3X/5X-F (CB65/CB75/CB75B/CB75C/CB86) R3X/5X-F (RB91/RB91B/RB91C/RB303)	NB-1606001 Ver.2

Ver. 1: Launched in June 2016.
Ver. 2: Launched in October 2016. Add a fixative (Loctite 243) inside of housing on page 3.

SYMPTOM

The pedal axle set (039169-Z/0000090853) has been discontinued.

REASON

The one-piece crank is no longer available from our vender as of March 2016, so it has been discontinued.

SOLUTION

1. JHT has created the new pedal axle set (1000387880).

Model Number	One-piece crank (old)	Three-piece crank (new)
H3X/5X-F (CB64) U3X/5X-F (CB65/CB75/CB75B/CB75C/CB86)	039169-Z	1000387880
H3X/5X-F (CB72/CB72B/CB72C/CB87) R3X/5X-F (RB91/RB91B/RB91C/RB303)	0000090853	

Old – pedal axle set (e.g. kits no. #039179-Z) with one-piece crank

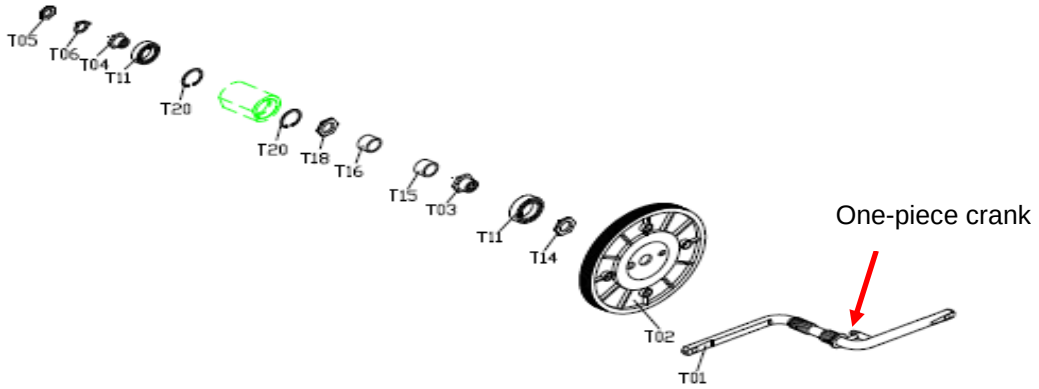

New – pedal axle set (kits no. #1000387880) with three-piece crank and pedal set

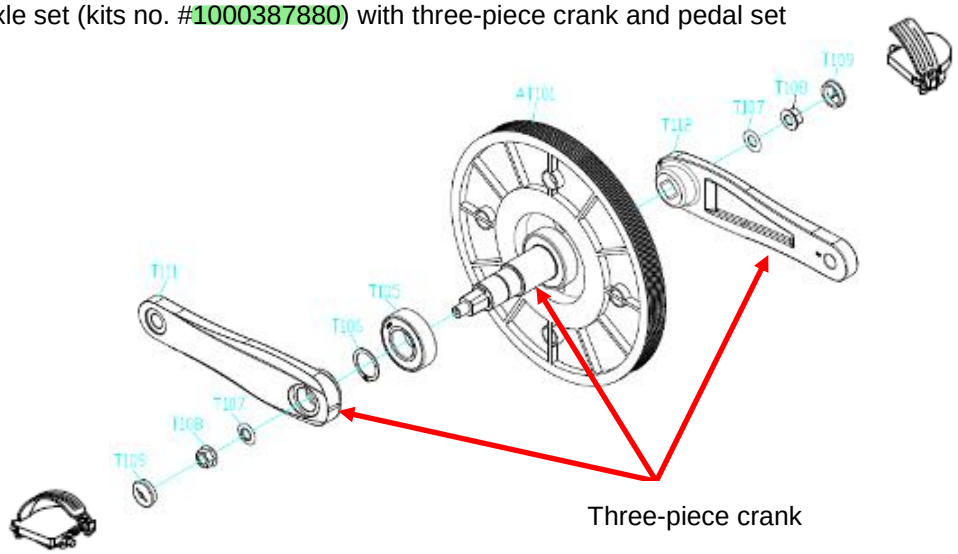

2. Installation instructions begin on Page 2.

3. The new pedal axle set is available beginning in July 2016.

SOP for pedal axle set installation

NOTE: This SOP only shows how to install pedal axle set into frame. Please refer to the service manual for instructions showing how to remove the drive axle set from the frame.

The pedal axle set (part number #1000387880) includes the following components:

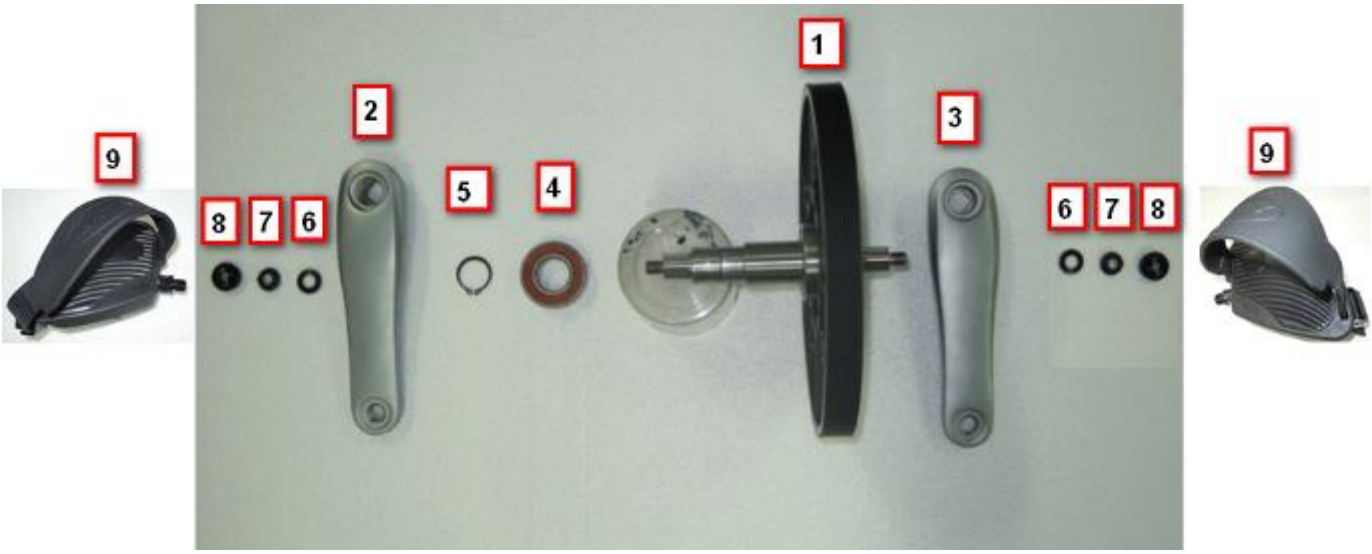

Item	Parts number	Description	Q'ty
1	1000387881	Pedal Axle Set;;;;;H-3X/5X/7X-04-F;;	1
2	0000080124	Crank;;Left;7Inch;SS41;Chrome;silvery gr	1
3	0000080125	Crank;;Right;7Inch;SS41;;RB85	1
4	004082-A2	Bearing;Ball;6205ZZ;Φ25xΦ52x15T;TPI;	1
5	005366-00	Snap Ring; External C-Shaped;S-25;;;	1
6	005239-00	Washer; Disc Spring;Φ10.0XΦ20.0X1.0T;;BED	1
7	004964-00	Nut; Hex Flange;M10X1.25P;SS41;Black Zinc	1
8	001130-00	Cover; Crank; up; ABS/PA757;;23x7;CB01;	1
9	0000090518	Pedal Set; L/R	1

SOP for pedal axle set installation

E.g. U-3x/5x/7x (CB75B)

1. Clean the bearing frame and dab a fixative (Blue Loctite 243 is recommended) inside of housing in the frame (two sides) prior to installation of new drive axle set.

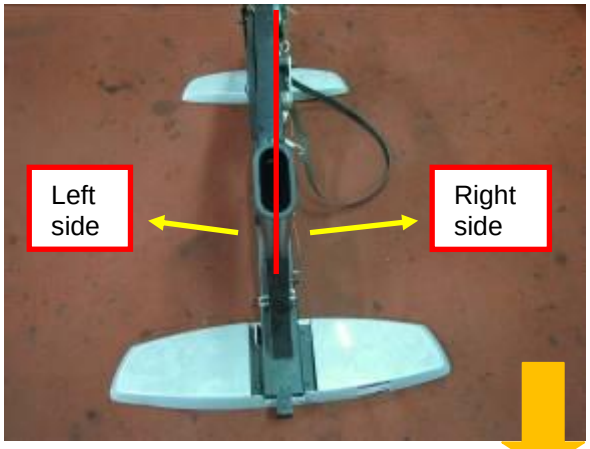

2. Install the bearing (item #4 in the table) into the left side of the frame.

3. Slide the pedal axle set (item #1 in the table) into the frame from the right side.

SOP for pedal axle set installation

4. Install the snap ring (item #5 in the table) to secure the bearing on the left side of the frame.

5. Install the 3 screws to secure the bearings on both sides.

SOP for pedal axle set installation

6. Install the drive belt.

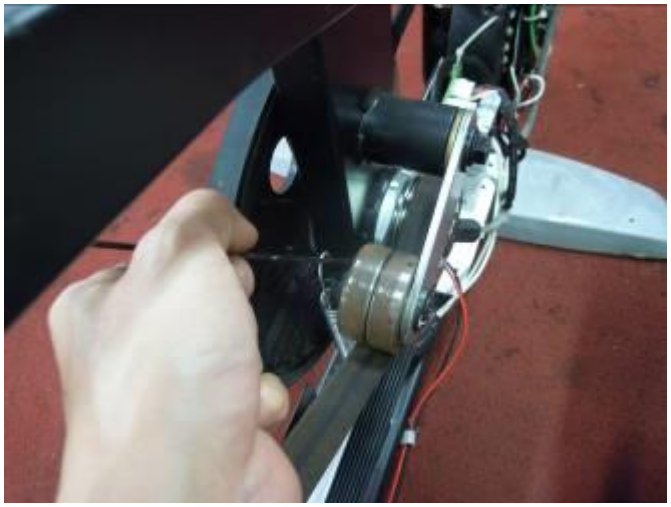

7. Use a hook or loop of wire to install the spring on the frame.

8. Install the left and right side covers.

SOP for pedal axle set installation

9. Using a Hexagon-Socket-Head sleeve wrench, install the washer (item #6 in the table) and nut (item #7 in the table) to hold the crank (item #2 & #3 in the table) to the pedal axle set. ***NOTE:*** Torque the nut to 80 N-m/800 kgf-cm.

SOP for pedal axle set installation

10. Use a slotted screwdriver to fix the cover (item #8 in the table) to the crank.

11. Use a pedal wrench to attach the pedals (item #9 in the table).